User Manual

VingCard Allure

ASSA ABLOY Hospitality

ASSA ABLOY

The global leader in
door opening solutions

Copyrights

The information in this document is subject to change at the sole discretion of ASSA ABLOY without notice.

Any use, operation or repair in contravention of this document is at your own risk. ASSA ABLOY does not assume any responsibility for incidental or consequential damages arising from the use of this manual.

All information and drawings in this document are the property of ASSA ABLOY. Unauthorized use and reproduction is prohibited. For FCC, IC and R&TTE statements for the BLE module, see 'Installation instruction Mobile access option'.

VingCard and Elsafe are registered trademarks of ASSA ABLOY.

Table of contents

FCC/ISED (IC) statements 6

FCC statements for LCU 6333/6334 6
ISED (IC) statements for LCU 6333/6334 6
FCC statements for BLE module 7
ISED (IC) statements for BLE module 7
Déclarations d' Industry Canada pour module BLE 8

1. Introduction 9

2. Installation 11

2.1 Installation checklist 11
2.2 To install a main control unit 12
2.2.1 To fasten the main PCBA to the electronics housing 12
2.2.2 To fasten the LCU 12
2.2.3 To fasten the electronics housing 12
2.2.4 To fasten the main PCBA to the input/output 12
2.2.5 To connect a frame communication unit 13
2.2.6 To install a ZigBee endnode 13
2.2.7 To install a BLE module 14
2.2.8 To install an Ethernet module 15
2.2.9 To connect a door unit 3012 17
2.2.10 To connect a door opener 17
2.2.11 To connect a doorbell 18
2.2.12 To connect an electric strike 18
2.2.13 To connect an egress switch 19
2.3 To install an access panel (Grand) 19
2.4 To install a wired room panel 21
2.4.1 To connect a wired room panel to an access panel (Grand) 24
2.4.2 To connect a wired room panel to a room status panel (Blend) 24
2.5 To install frame/door communication units 25
2.5.1 Installation 25
2.5.2 Battery-low warning 26
2.5.3 Battery replacement 26
2.6 To install a junction box (new installations) 27
2.6.1 Large junction box 27
2.6.2 Small junction box 27
2.7 To install a junction box (existing installations) 28
2.7.1 Large junction box 28
2.7.2 Small junction box 28
2.8 To install a GPIO module 29
2.8.1 To connect a GPIO module 30
2.8.2 To power supply a GPIO module 32
2.8.3 To communicate with a GPIO module 32
2.8.3.1 Example 1: Connecting to Chic corridor panel 32
2.8.3.2 Example 2: Connecting to main control unit 33

2.8.4 GPIO module inputs 34
2.8.4.1 Example 1: Connecting dry switches for DND and MUR 34
2.8.4.2 Example 2: Connecting DND and MUR signals from 12V or 24V PLC 34
2.8.5 GPIO module outputs 35
2.8.5.1 Example 1: Connecting to doorbell 35
2.8.5.2 Example 2: Connecting to external DND and MUR signal lamps 35

3. Main control unit 36

3.1 Battery backup 36

4. GPIO module 37

4.1 To configure a GPIO module 37
4.2 To upgrade firmware in a GPIO module 38

5. Ethernet module 39

5.1 To connect an Ethernet module to the Visionline server 39
5.2 Web interface 40
5.3 To factory reset an Ethernet module 41
5.4 Boot-up procedure 41
5.5 More about finding the server 43
5.5.1 To commission Ethernet modules with DNS 43
5.5.1.1 Single server 43
5.5.1.2 Multiple servers 44
5.5.2 To commission Ethernet modules without DNS 44
5.5.3 To switch to backup server with DNS 45
5.5.3.1 Single server 45
5.5.3.2 Multiple servers 45
5.5.4 To switch to backup server without DNS 45

6. Corridor panels 46

6.1 To connect a room status panel to an access panel 46
6.2 To change color of a panel 47

7. Wired room panels 48

7.1 To dim the light on a wired room panel 48

8. Troubleshooting and maintenance 49

8.1 To reset the main control unit 49
8.2 To remove an access panel 49
8.3 To reset the tamper switch 50
8.4 To power open an access panel 50
8.5 To emergency open a door communication unit 50

Appendix: Quick reference of technical data 51

Main control unit 51

Room bus cable 51
Access panel 51
Room status panel 51
Wired room panel 52
Frame communication unit 52
Door communication unit 52
Ethernet module 52
Junction box, new installations 53
Junction box, existing installations 53
GPIO module 53

FCC/ISED (IC) statements

FCC (Federal Communications Commission) statements for LCU 6333/6334

This device complies with Part 15 of the FCC Rules. Operation is subject to the following two conditions:

(1) this device may not cause harmful interference, and
(2) this device must accept any interference received, including interference that may cause undesired operation.

Note: This equipment has been tested and found to comply with the limits for a Class A digital device, pursuant to part 15 of the FCC Rules. These limits are designed to provide reasonable protection against harmful interference when the equipment is operated in a commercial environment. This equipment generates, uses and can radiate radio frequency energy and, if not installed and used in accordance with the instruction manual, may cause harmful interference to radio communications. Operation of this equipment in a residential area is likely to cause harmful interference; in which case, correction of the interference is at the user's expense.

Important: **Changes or modifications to an intentional or unintentional radiator not expressly approved by the party responsible for compliance could void the user's authority to operate the equipment.**

The LCU must be labeled to say '**FCC ID: Y7V-LCU6334**' or '**FCC ID: Y7V-LCU6333**', depending on which LCU (*lock controller unit*) that is applicable.

ISED (IC) statements for LCU 6333/6334

This device complies with Industry Canada licence-exempt RSS standard(s).
Operation is subject to the following two conditions:

(1) this device may not cause interference, and
(2) this device must accept any interference, including interference that may cause undesired operation of the device.

Le présent appareil est conforme aux CNR d'Industrie Canada applicables aux appareils radio exempts de licence. L'exploitation est autorisée aux deux conditions suivantes:

(1) l'appareil ne doit pas produire de brouillage, et
(2) l'utilisateur de l'appareil doit accepter tout brouillage radioélectrique subi, même si le brouillage est susceptible d'en compromettre le fonctionnement.

The LCU is labeled '**IC:9514A-LCU6334**' or '**IC:9514A-LCU6333**', depending on which LCU (*lock controller unit*) that is applicable.

The term "IC" before the equipment certification number only signifies that the Industry Canada technical specifications were met.

Le terme "IC" devant le numéro de certification signifie seulement que les specifications techniques Industrie Canada ont été respectées.

FCC (Federal Communications Commission) statements for BLE module

This device comply with Part 15 of the FCC Rules. Operation is subject to the following two conditions:

1) The BLE Module may not cause harmful interference, and
2) The BLE Module must accept any interference received, including interference that may cause undesired operation.

Important note: To maintain compliance with FCC´s RF exposure guidelines, this equipment should be installed and operated with minimum distance 20 cm between the radiator and your body. Use only the supplied antenna.

This equipment complies with FCC radiation exposure limits set forth for an uncontrolled environment. This transmitter must not be co-located or operating in conjunction with any other antennas or transmitters.

Changes or modifications not expressly approved by the party responsible for compliance could void the user's authority to operate the equipment.

Note: This equipment has been tested and found to comply with the limits for a Class B digital device, pursuant to Part 15 of the FCC Rules. These limits are designed to provide reasonable protection against harmful interference in a residential installation. This equipment generates, uses and can radiate radio frequency energy and, if not installed and used in accordance with the instructions, may cause harmful interference to radio communications. However, there is no guarantee that interference will not occur in a particular installation. If this equipment does cause harmful interference to radio or television reception, which can be determined by turning the equipment off and on, the user is encouraged to try to correct the interference by one or more of the following measures:

- Reorient or relocate the receiving antenna.
- Increase the separation between the equipment and receiver.
- Connect the equipment into an outlet on a circuit different from that to which the receiver is connected.
- Consult the dealer or an experienced radio/TV technician for help.

The concerned end product must be labeled to say '**Contains FCC ID: Y7V-7001CC1**'.

The label stating this can be seen by opening the back cover of the Host System; the label is attached on the Host System, and is seen directly.

ISED (IC) statements for BLE module

This device comply with Industry Canada licence-exempt RSS standard *CAN ICES-3 (B)/ NMB-3(B) B*. Operation is subject to the following two conditions:

1) The BLE Module may not cause interference, and
2) The BLE Module must accept any interference, including interference that may cause undesired operation of the device.

Important note: To comply with Industry Canada RF radiation exposure limits for general population, the antennas used for these transmitters are exempted from *Routine Evaluation Limits – SAR Evaluation* in accordance with *RSS-102 section 2.5.1*.

Under Industry Canada regulations, this radio transmitter may only operate using an antenna of a type and maximum (or lesser) gain approved for the transmitter by Industry Canada. To reduce potential radio interference to other users, the antenna type and its gain

should be so chosen that the equivalent isotropically radiated power (e.i.r.p.) is not more than that necessary for successful communication.

This BLE Module '**IC: 9514A-7001CC1**' has been approved by Industry Canada to operate with the antenna type listed below with the indicated maximum permissible gain and required antenna impedance. Antenna types not included in this list, having a gain greater than the maximum gain indicated for that type, are strictly prohibited for use with this device.

Name/Model	**Gain**	**Impedance**
Inverted F-antenna	3.0 dBi	50 ohm

The term "IC" before the equipment certification number only signifies that the Industry Canada technical specifications were met. The concerned end product must be labeled to say '**Contains IC: 9514A-7001CC1**'.

The label stating this can be seen by opening the back cover of the Host System; the label is attached on the Host System, and is seen directly.

Déclarations d' Industry Canada pour module BLE

Cet équipement est conforme aux normes d'exemption de licence RSS d'Industry Canada *CAN ICES-3 (B)/NMB-3(B) B*. Son utilisation est soumise aux deux conditions suivantes:

1) Le module BLE ne doit pas provoquer d'interférence, et
2) Le module BLE doit accepter toute interférence, y compris des interférences susceptibles de provoquer un fonctionnement indésirable de l'équipement.

Remarque importante: Pour respecter les limites d'exposition aux radiofréquences d'Industry Canada pour le grand public, les antennes utilisées pour ces émetteurs-transmetteurs sont exemptées des limites d'évaluation de *routine – évaluation SAR*, conformément à la norme *RSS-102 section 2.5.1*.

Conformément aux réglementations d'Industry Canada, cet émetteur radio peut uniquement fonctionner à l'aide d'une antenne dont le type et le gain maximal (ou minimal) pour ces émetteurs-transmetteurs sont approuvés par Industry Canada. Pour réduire le risque d'interférence éventuelle pour les autres utilisateurs, le type et le gain de l'antenne doivent être choisis de manière à ce que la puissance isotrope rayonnée équivalente (p.i.r.e.) ne soit pas supérieure à la puissance nécessaire à une bonne communication.

Ce module BLE '**IC: 9514A-7001CC1**' a été approuvé par Industry Canada pour une utilisation avec les types d'antenne indiqués ci-dessous avec le gain maximum autorisé indiqué et l'impédance d'antenne requise. Il est strictement interdit d'utiliser avec cet appareil un type d'antenne ne figurant pas dans cette liste ou ayant un gain supérieur au gain maximum indiqué pour ce type.

Appellation/Modèle	**Gain**	**Impédance**
Antenne F inversée	3.0 dBi	50 ohm

Le terme "IC" devant le numéro de certification de l'équipement signifie seulement que les spécifications techniques d'Industry Canada ont été respectées. Le produit final concerné doit porter une étiquette avec la mention: '**Contient IC: 9514A-7001CC1**'.

1. Introduction

Allure is a locking and room status system with modular architecture. Several configurations are possible, and Figure 1 shows all possible connections to the *main control unit*; an in-wall mounted junction box which also contains an RFID *lock controller unit*, LCU 6333/LCU 6334. Chapter 2 describes mounting and connection of the different Allure parts, while chapters 3-7 give other information about the different parts. Chapter 8 describes troubleshooting and maintenance while the Appendix gives a quick reference of technical data for the different Allure parts and also for the room bus cable etc. ***Note:*** The Allure product range also includes the below items

- a power supply with an input of *100-240V~50/60 Hz 0,5A* and an output of *12 VDC, 1A* (electric strikes may however need a separate power supply suitable for the power consumption of the strike)
- a doorbell which is constructed to work on *12VDC, 1A* to utilize the same power
  Note: Some of the parts in Figure 1 are for future use; ask Product Marketing for details.

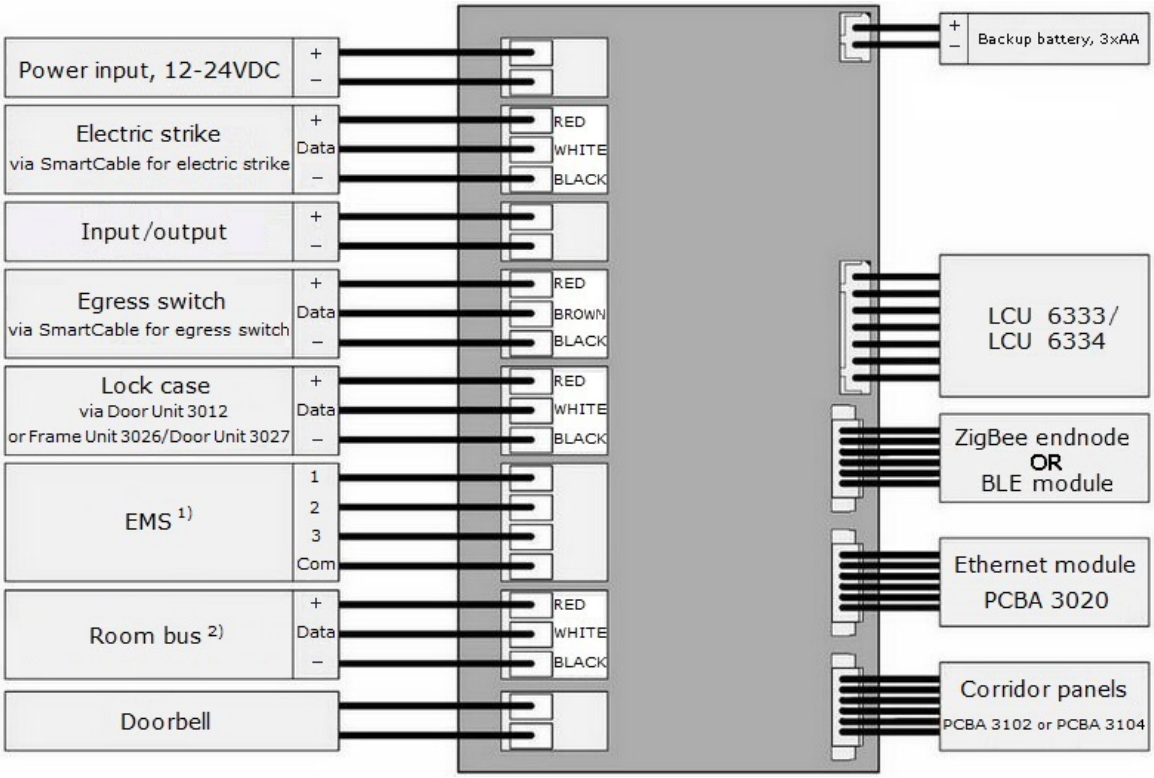

Figure 1

[1] 'EMS' are three transistor outputs which give a signal based on what card that is presented at the LCU (EMS 1 is triggered at 'guest first entry'; EMS 2 is triggered at 'guest normal entry'; EMS 3 is triggered at 'staff entry')

[2] The *room bus cable* is a cable inside the rooms to which wired room panels, GPIO modules and future modules can be connected. There is no limitation in the number of items that can be connected to the room bus cable.

Attention: Observe precautions for handling; electrostatic sensitive devices.

The Allure system has got *corridor panels* (divided into *access panels* and *room status panels*) and *in-room panels* (*wired room panels*). The following corridor panels are available:

Access panels	
 Figure 2	*Allure Grand* includes • doorbell button (optional) • room number (optional) • RFID card reader • status indicator for DND (*do not disturb*)/MUR (*make up room*); the line at the bottom of the panel will be red if DND is activated and blue if MUR is activated • 16 selectable light color themes; see section 6.2 for details on how to change the color • *if requested by the customer:* text/picture (e.g. hotel logo) printed on the panel according to the customer's specification
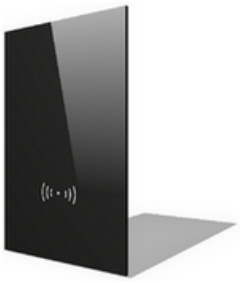 *Figure 3*	*Allure Solo* includes • RFID card reader • *if requested by the customer:* text/picture (e.g. hotel logo) printed on the panel according to the customer's specification
Room status panels	
 Figure 4	*Allure Blend* includes • doorbell button (optional) • room number (optional) • status indicator for DND (*do not disturb*)/MUR (*make up room*); the line at the bottom of the panel will be red if DND is activated and blue if MUR is activated • 16 selectable light color themes; see section 6.2 for details on how to change the color • *if requested by the customer:* text/picture (e.g. hotel logo) printed on the panel according to the customer's specification
 Figure 5	*Allure Chic* includes • doorbell button (optional) • status indicator for DND (*do not disturb*)/MUR (*make up room*); the line at the bottom of the panel will be red if DND is activated and blue if MUR is activated • 16 selectable light color themes; see section 6.2 for details on how to change the color • *if requested by the customer:* text/picture (e.g. hotel logo) printed on the panel according to the customer's specification

2. Installation

2.1 Installation checklist

1. Mount the Allure items according to sections 2.2-2.8.
2. Make all necessary connections of Allure items; see details in sections 2.2-2.8.
3. Power up the Allure items.
4. Download data from the Visionline server to *Lock Service 3G* [1].
5. Set system ID in each lock [2].
6. Initialize each lock with room number and also with parameters set up in Visionline for each concerned lock [3]. ***Note:*** The initialization will also set the time in the lock.
7. Configure each lock with applicable choices [4] (e.g. enable tamper switch, set fail safe strike etc).
8. Snap the access panel onto the back frame and push done the locking mechanism; see Figure 28.
9. Present a valid staff card at the access panel and make sure that the door opens.

[1] See the section *Download data from server* in *Quick reference guide Lock Service 3G* for details.

[2] See the section *Set system ID in lock* in *Quick reference guide Lock Service 3G* for details.

[3] See the section *Initialize lock* in *Quick reference guide Lock Service 3G* for details.

[4] See the section *Configure lock* in *Quick reference guide Lock Service 3G* for details.

2.2 To install a main control unit

The main control unit is an in-wall mounted junction box consisting of a main PCBA (*printed circuit board assembly*) and an RFID lock controller unit (*LCU 6333/LCU 6334*). The main control unit can also be connected to one or more of the units shown in Figure 1.

1. ***Important:*** It is required to mount 3 AA backup batteries in the battery holder of the main control unit; see section 3.1 for details.
2. Draw all input/output cables into the *main control unit junction box*.
3. Connect all input/output cables to pluggable terminal blocks.
4. Install the main control unit junction box onto the wall; there are different fastening options, see below.
5. Plug all pluggable terminal blocks to the main PCBA.
6. Install the housing for electronics into the *main control unit junction box*.

Figure 6

Fastening options for the junction box:

- *Option 1:* fasten with screws directly through the box into the wall material; see Figure 6.
- *Option 2:* add a bracket (purchased separately) for fastening in a building element inside the wall.
- *Option 3:* add a bracket (purchased separately) for fastening in a plate type wall.

2.2.1 To fasten the main PCBA to the electronics housing

1. Use self-threading screws.

2.2.2 To fasten the LCU with shield plate to the housing for electronics

1. Fasten the adjustable sliding mechanism with two screws; one on each side of the unit.

2.2.3 To fasten the electronics housing to the main control unit junction box

1. Use machine screws into the threaded inserts in the *main control unit junction box*.

2.2.4 To fasten the main PCBA to the input/output

1. All inputs and outputs are connected through terminal blocks on the main PCBA.

2.2.5 To connect a frame communication unit

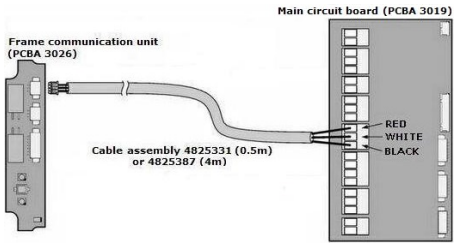

Figure 7

At delivery of a frame communication unit, either *cable assembly 4825331* or *cable assembly 4825387* is included depending on which cable length that is applicable:

Cable assembly 4825331
- 0.50m long (19 11/16’’)
- 3x26 AWG

Cable assembly 4825387
- 4m long (157 31/64’’)
- 3x26 AWG

2.2.6 To install a ZigBee endnode

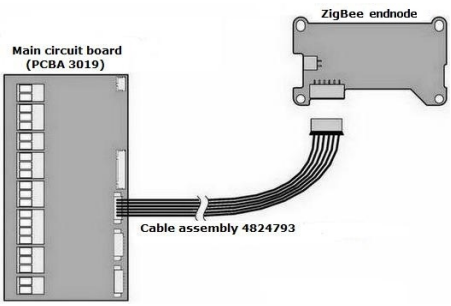

Figure 8

Cable assembly 4824793 (included in *ZigBee end node kit with Allure cable*):
- 0.13 m (5 7/64’’)
- 6 x 26 AWG
- UL 1061

To fasten a ZigBee endnode to the electronics housing:

Figure 9

1. Slide the ZigBee endnode in place inside the plastic features (lower part) in the housing for electronics; see Figure 9.

2.2.7 To install a BLE module

Note: If desired, the BLE module can be combined with an Ethernet module; see details here.

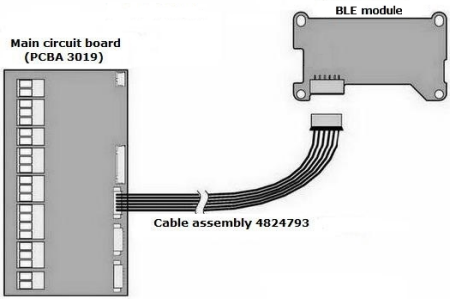

Figure 10

Cable assembly 4824793:

- 0.13 m (5 7/64'')
- 6 x 26 AWG
- UL 1061

To fasten a BLE module to the electronics housing:

Figure 11

1. Slide the BLE module in place inside the plastic features (upper part) in the housing for electronics; see Figure 11.

2.2.8 To install an Ethernet module

Note: If desired, the Ethernet module can be combined with a BLE module; see details here.

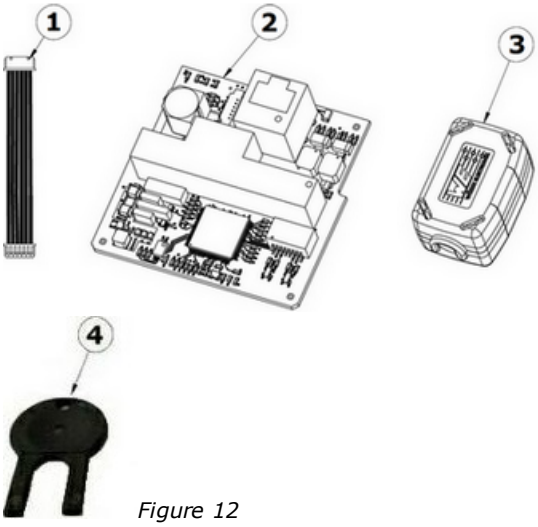

Figure 12

Item number 4825882 (*Ethernet module, Allure*) contains the below parts:	
Pos	**Description**
1	Cable assy. D06 - D06 Type 2
2	PCBA 3020
3	Ferrite, for cable
4	Ferrite tool

Figure 13

1. Use the ferrite tool to open the ferrite.

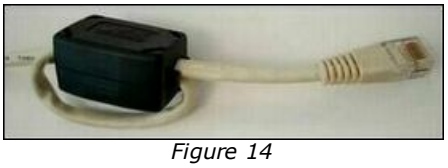

Figure 14

2. Mount the Ethernet cable in the ferrite as shown in Figure 14.

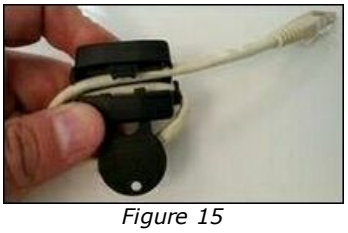

Figure 15

3. If the ferrite later needs to be opened, use the ferrite tool again.

Continued on next page

To fasten an Ethernet module to the electronics housing:

1. Slide the Ethernet module in place inside the plastic features in the housing for electronics; see Figure 16.

Note: For more information about the Ethernet module, see chapter 5.

If *BLE and Ethernet* is applicable, the modules are installed as shown in Figure 17.

Figure 17

2.2.9 To connect a door unit 3012

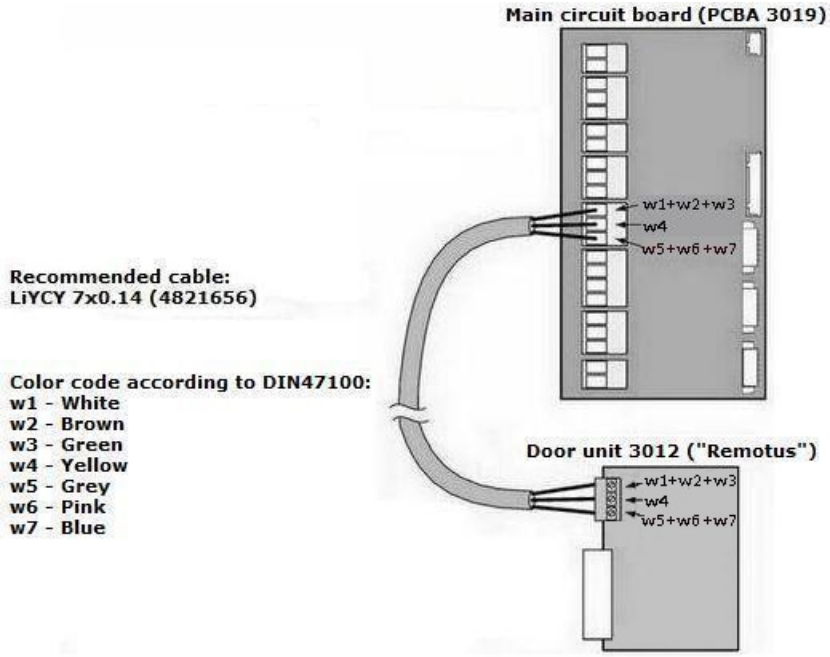

Figure 18

Note: The LiYCY cable is not included at delivery of *door unit 3012*, but must be ordered separately.

2.2.10 To connect a door opener

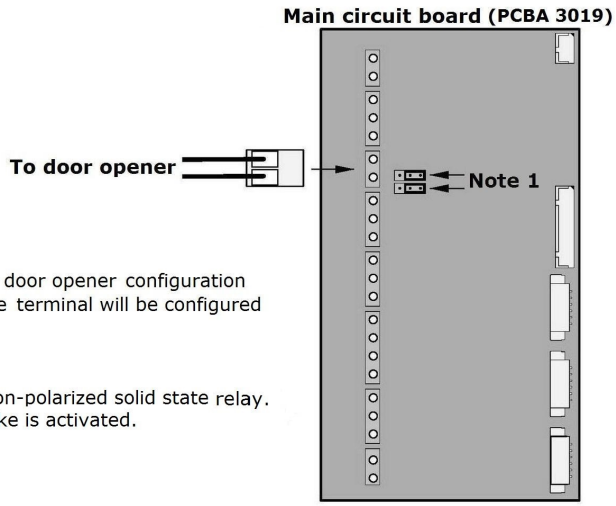

Note 1: Place the jumpers in the position to the right for door opener configuration (if the jumpers are placed in the left position, the terminal will be configured for *general purpose input output*)

Note 2: The terminal is connected to the contacts of a non-polarized solid state relay. The relay contacts close 1s after the electric strike is activated. The relay contacts are closed for 1s.

Figure 19

2.2.11 To connect a doorbell

Note 1: The doorbell may be connected either to *PCBA 3019* or *PCBA 3024*.
Note 2: The doorbell output is a normally open contact of a solid state relay.
Note 3: The doorbell output is not polarized (may be used for both AC and DC).
Note 4: The relay contacts are closed as long as the doorbell button is pushed.

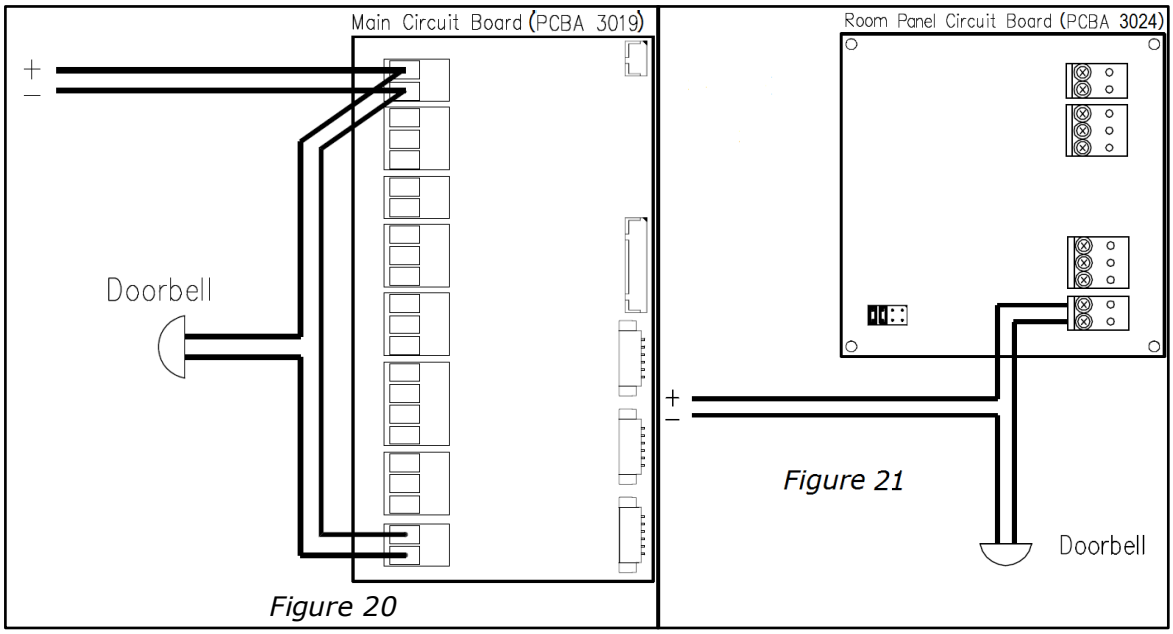

Figure 20

Figure 21

2.2.12 To connect an electric strike

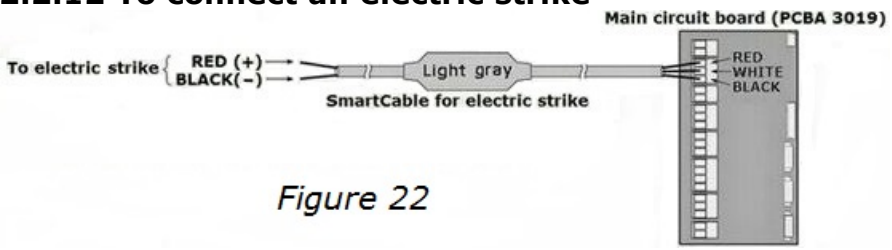

Figure 22

Note: The electric strike is always connected via SmartCable.

Specification for electric strike:

- If the strike is connected to the *main control unit* (MCU), any strike designed for 12-24VDC can be used.
- The power supply must be powerful enough for both the MCU and the strike under load.
- The maximum current from the MCU strike output is 350 mA.
- You can use any strike with its own power supply by using a relay on the MCU strike output.

The SmartCable

- only works with the *VingCard Allure* main control unit
- must be ordered from ASSA ABLOY Hospitality
- can be extended locally if required
- can be configured in *Lock Service 3G* ('Set fail safe strike' and 'Set fail secure strike' under **Configure lock**)
- is not interchangeable with the SmartCable for the egress switch

2.2.13 To connect an egress switch

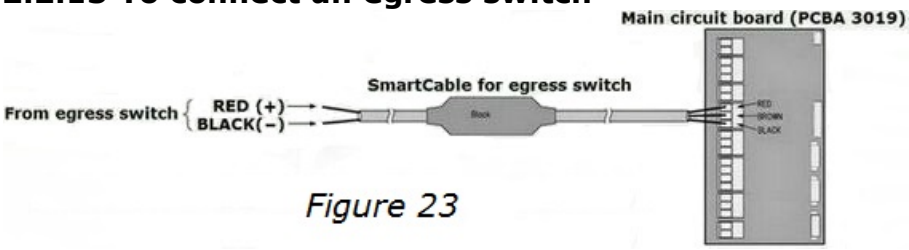

Figure 23

Note: The egress switch is always connected via SmartCable.

The SmartCable
- only works with the *VingCard Allure* main control unit
- must be ordered from ASSA ABLOY Hospitality
- can be extended locally if required
- is not interchangeable with the SmartCable for the electric strike

2.3 To install an access panel (Grand)

Follow steps 1-7 below to mount an access panel:

Figure 24	1. Make a cut-out for the junction box in the wall; see dimensions in section 2.6 for new installations and in section 2.7 for existing installations. Mount the junction box in the wall with two screws.
Figure 25	2. Mount the main control unit in the junction box. 3. Mount the back frame of the access panel on the main control unit with four screws.

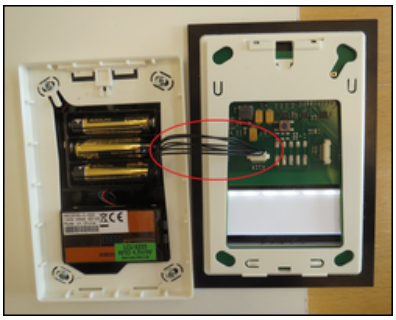

Figure 26

4. Connect the access panel to the main control unit; see details in Figure 26 and in step 5.

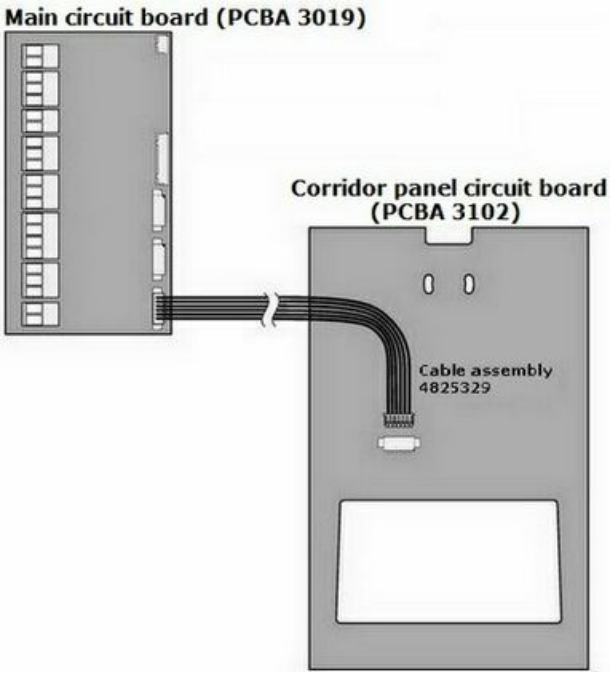

Figure 27

Cable assembly 4825329 (included at delivery of *Allure Grand* access panel):

- 0.22 m long (8 21/32")
- 6 x 26 AWG
- UL 1061

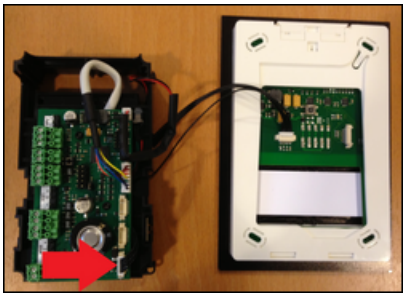

Figure 28

5. On the main control unit, use the connector marked with the arrow in Figure 28 to connect with the access panel.

 Figure 29	6. Let the locking mechanism of the back frame be open (see marks in Figures 29 and 30) and snap the access panel onto the back frame.
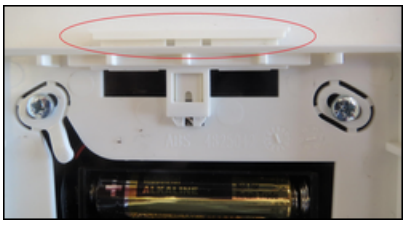 *Figure 30*	
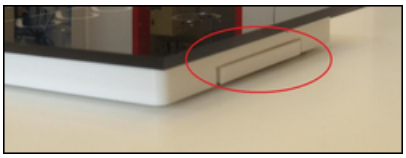 *Figure 31*	7. Push down the locking mechanism to close it.
Note: To access the service connector, backup batteries and reset switch, the front part of the access panel must be removed again from the back frame; this is done by pulling the locking mechanism up. Make sure that the locking mechanism is placed in a discrete way, invisible for hotel guests.	

2.4 To install a wired room panel

The *wired room panel (in-room panel)* is an optional part of the Allure system, and can be used in the Allure system configurations having DND/MUR (*do not disturb/ make up room*) functionality. The functionality of the panel is to let users set status of the room, which is then reflected on the corridor panel, and as a message in the central system if the Allure solution is part of an online system. A series of wired room panels can be installed in a chain, to go with one corridor panel/one room.

Figure 32

Figure 33

Note: If DND is activated, the doorbell button on the corresponding access panel will be deactivated and staff cards will not work at the access panel.

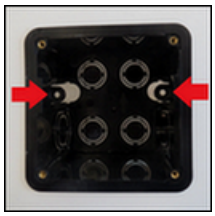

Figure 34

1. Make a cut-out for the junction box in the wall; see dimensions in section 2.6 for new installations and in section 2.7 for existing installations.
2. Mount the junction box in the wall with two screws.

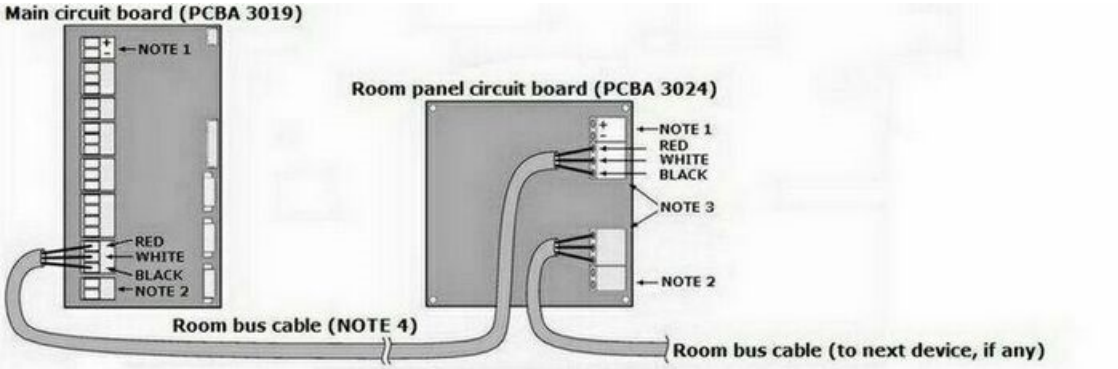

Note 1: The power supply (12-24VDC) can be connected to either PCBA 3019 or PCBA 3024 (or neither, if PoE is applicable). The PCBA 3019 power input has a somewhat higher protection than the PCBA 3024 power input.
Note 2: The doorbell can be connected to either PCBA 3019 or PCBA 3024. The connection is not polarized.
Note 3: The two room bus connectors are equal. The cable to PCBA 3019 can be connected to eiter of the two.
Note 4: Use cable 4825308 or equivalent.

Figure 35

For specification of *room bus cable* (ordered separately), see the Room bus cable section in the Appendix.

Figure 36

3. See Figures 36-37 for details about the cable from the *main control unit* to the *wired room panel*. At the *main control unit*, the wires should be connected as
   - red wire on top
   - white wire in the middle
   - black wire on bottom

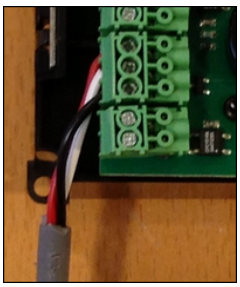

Figure 37

Detail of the above Figure 36

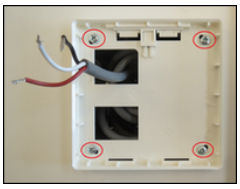 *Figure 38*	4. Draw the cable from the *main control unit* through the upper hole of the back frame for the *wired room panel*. 5. Mount the back frame in the junction box with four screws.
 Figure 39	6. Connect the cable from the *main control unit* on the back of the *wired room panel* according to Figures 39 and 40, i.e. - black wire on top - white wire in the middle - red wire on bottom
 Figure 40	Detail of the above Figure 39
 Figure 41	7. Snap the *wired room panel* onto the back frame; see Figures 41 and 42.
 Figure 42	
 Figure 43	8. Push down the locking mechanism on top of the *wired room panel*.

2.4.1 To connect a wired room panel to an access panel (Grand)

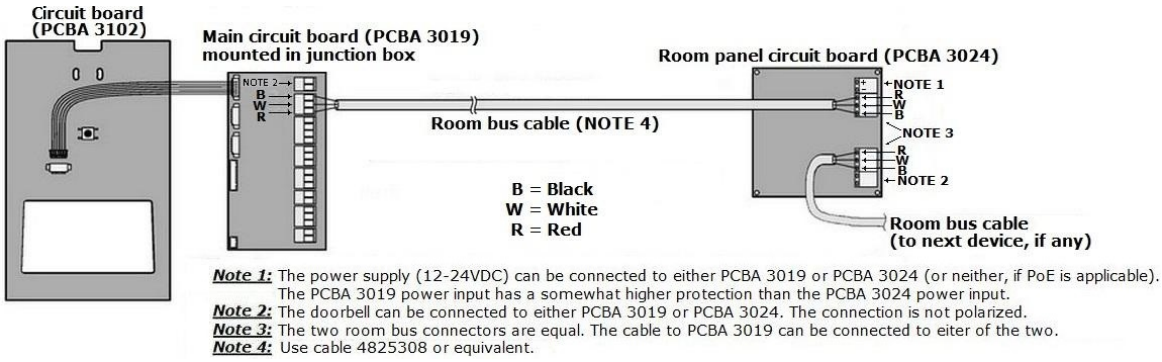

Figure 44

2.4.2 To connect a wired room panel to a room status panel (Blend)

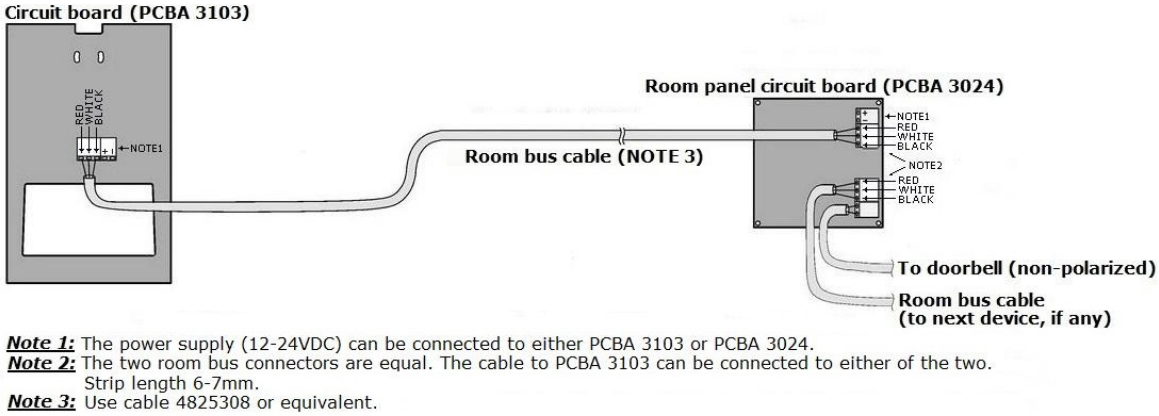

Figure 45

2.5 To install frame/door communication units

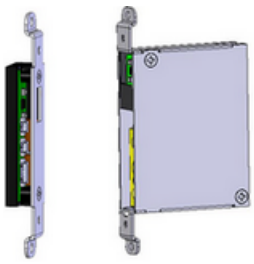

The Allure *frame/door communication units* are two modules which can be installed in an Allure setup where an electromechanical lock case is used as locking device. The use of the frame/door communication units eliminates the need for wiring from the Allure main control unit to the lock case inside the door leaf, considerably reducing installation cost and complexity. See cut-outs for ANSI (DA), ANSI (DB) and EURO respectively.

Figure 46: Frame communication unit (left) and door communication unit (right)

Note: If any of the functions 'stand open until time is' or 'stand open for hours' is applicable (see section about *Stand open card* in *User manual Visionline* for details), a lock case with minimum three switches must be used. With a two switch lock case, only the stand open function 'until next use' can be used, i.e. in that case a stand open card is used a second time to lock the door.

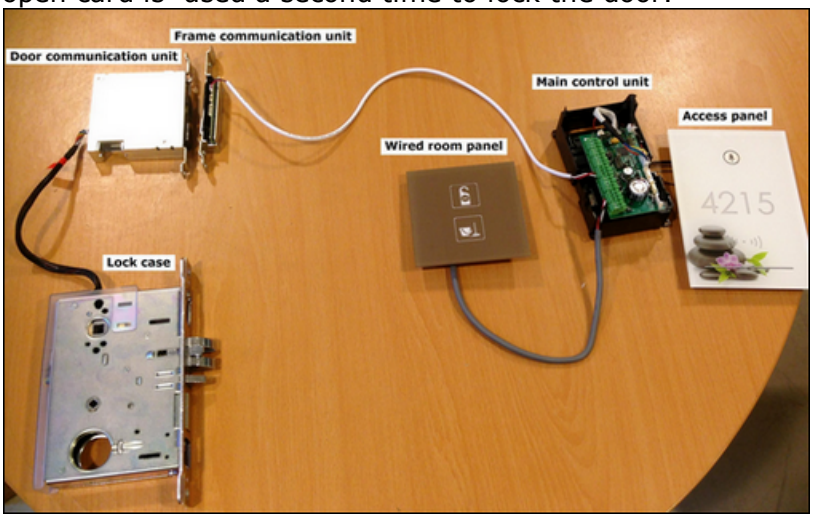

Figure 47

2.5.1 Mounting

1. Connect the *frame communication unit* to the single cable from the control source.
2. Install the *frame communication unit* to the precut frame and fasten it with two wooden screws.
3. Add the decorative front end and fasten it with two screws.
4. Connect the *door communication unit* to the lock case cable.
5. Install the *door communication unit* into the precut mortise in the door leaf and fasten it with two screws.
6. Install the batteries into the *door communication unit*.
7. Add the decorative front end to the *door communication unit* and fasten it with two screws.

2.5.2 Battery-low warning

When the battery voltage in the door communication unit drops below a certain level, a warning is given in the related corridor panel. If the battery voltage drops below a critical level, the LCU will enter a state of access denied, i.e. it is no longer possible to unlock the Allure lock with a card.

To be able to exchange the batteries in this case, follow the steps below:

1. In *Lock Service 3G*, choose **Parameters** in the left pane.
2. Click the **Readout** button; after this it will be possible to unlock the lock with a card (will work twice, i.e. for steps 3 and 5 below).

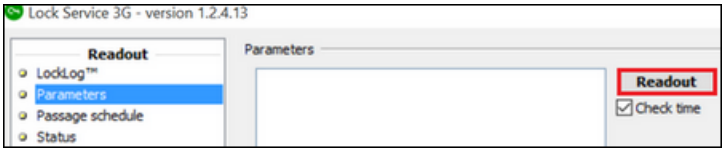

Figure 48

3. Present a card at the lock to unlock it.
4. Exchange the batteries in the door communication unit.
5. Present the card at the lock to unlock it again.

Note: An event about the battery exchange will be saved in the LockLog™. Choose **LockLog™** under **Readout** in the left pane of *Lock Service 3G* to read out a log. The log can also be saved and will then be available under **Database => LockLog™**

2.5.3 Battery replacement

1. Open the door and remove the front end of the door communication unit.

2.6 To install a junction box (new installations)

2.6.1 Large junction box

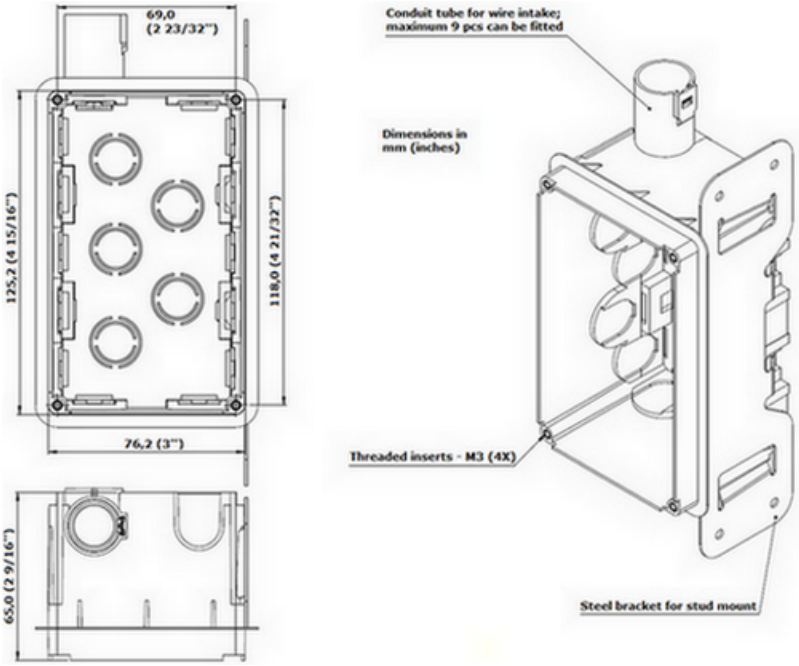

Figure 49

2.6.2 Small junction box

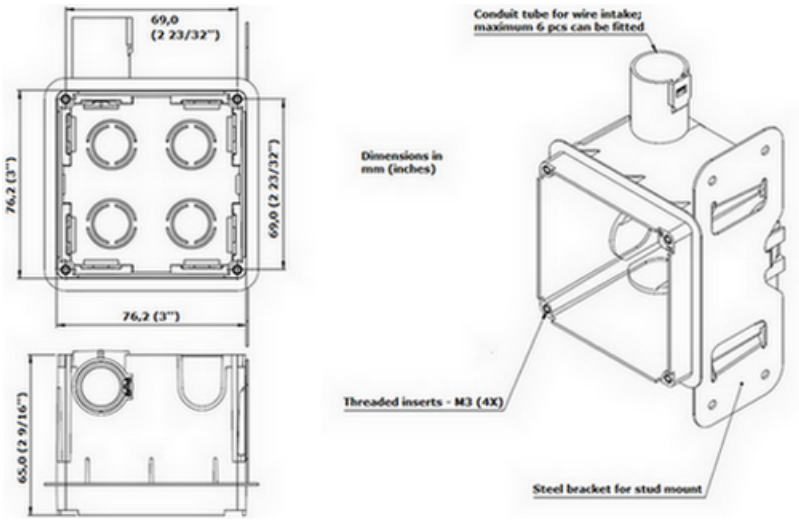

Figure 50

2.7 To install a junction box (existing installations)

2.7.1 Large junction box

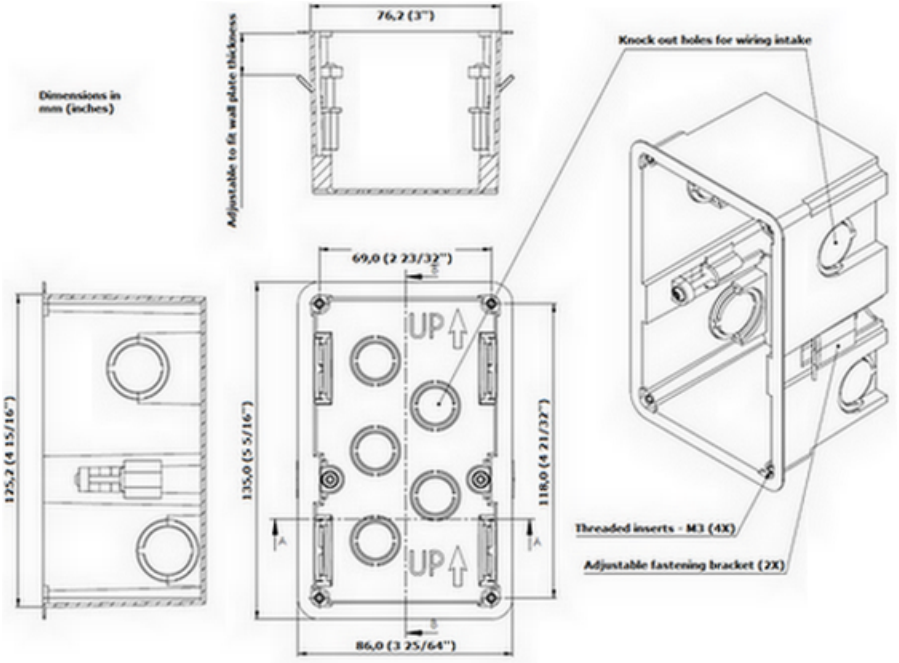

Figure 51

2.7.2 Small junction box

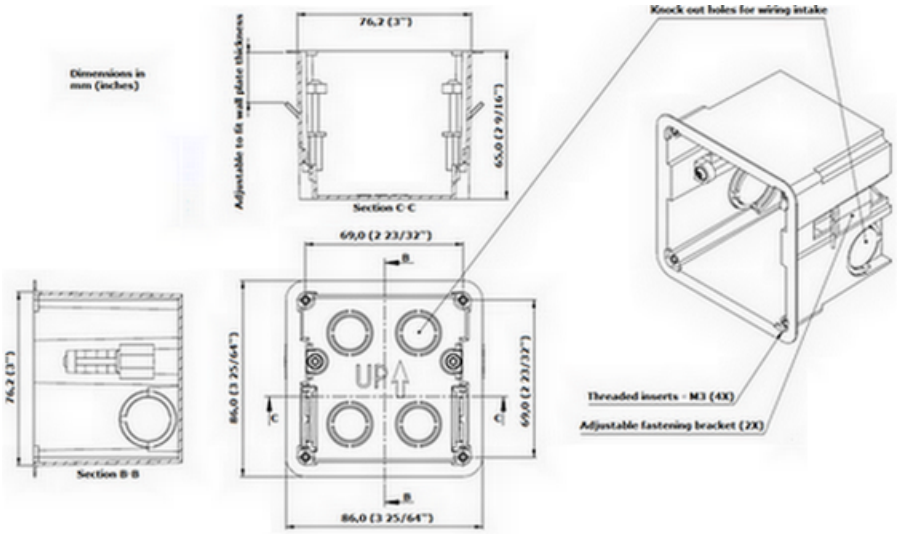

Figure 52

2.8 To install a GPIO module

The GPIO module may be mounted on a DIN rail. It is also possible to mount the GPIO module on the wall; this requires mounting ears, see Figures 53 and 54.

Note: For more information about the GPIO module, see chapter 4.

Figure 53

Figure 54

Terminal 1 of the GPIO module is marked with a white dot (red in Figure 55).

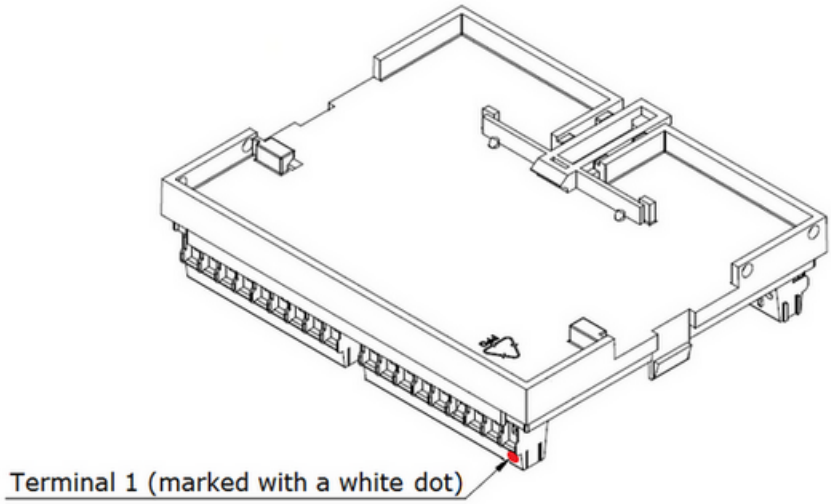

Figure 55

2.8.1 To connect a GPIO module

The GPIO module has four terminal blocks, each with 9 terminals, i.e. in total 36 terminals. Terminal number 1 is marked with a dot. See Figure 56 below for terminal numbering.

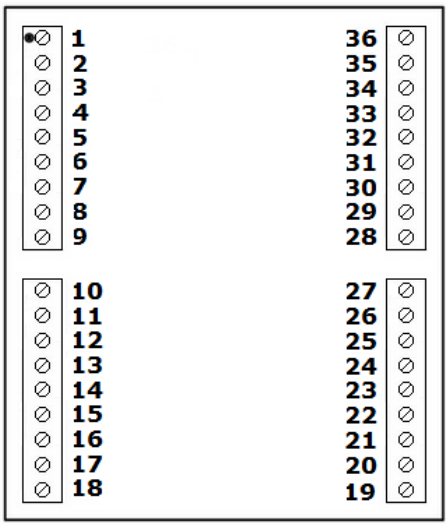

Figure 56

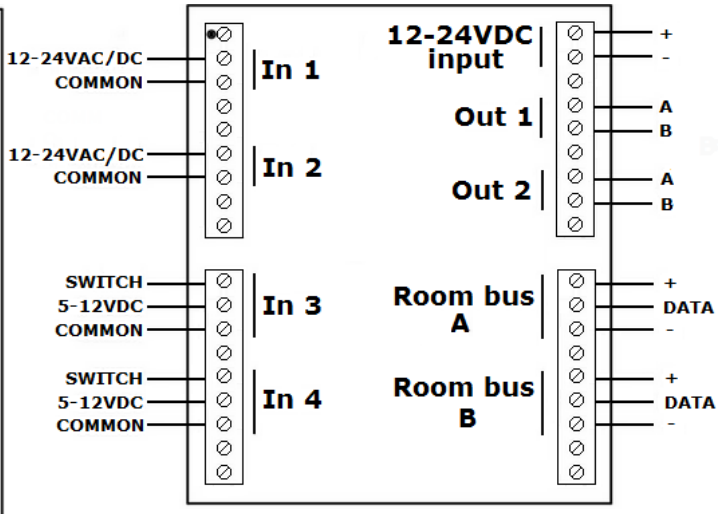

Figure 57

The terminals are connected as shown in Figure 57 and in Table 1 below.

Note: Terminals number 12, 16, 21, 25 and 35 are internally connected together; this is "ground".

Terminal	Terminal name	Description
1	For future use	For future use
2	In 1; 12-24VAC/DC	Low voltage signal input; relative to terminal 3
3	In 1; Common	Common for terminals 1 and 2. Floating.
4		
5	For future use	For future use
6	In 2; 12-24VAC/DC	Low voltage signal input; relative to terminal 7
7	In 2; Common	Common for terminals 5 and 6. Floating.
8		
9		
10	In 3; Switch	Dry switch input; relative to "ground"
11	In 3; 5-12VDC	Low voltage signal input; relative to "ground"
12	In 3; Common	Common for terminals 10 and 11; see note above
13		

Table continued on next page

14	In 4; Switch	Dry switch input; relative to "ground"
15	In 4; 5-12VDC	Low voltage signal input; relative to "ground"
16	In 4; Common	Common for terminals 14 and 15; see note above
17		
18		
19		
20		
21	Room Bus B; Common	Negative side of bus B; see note above
22	Room Bus B; Data	Communication line for bus B
23	Room Bus B; Power	Positive side of bus B
24		
25	Room Bus A; Common	Negative side of bus A; see note above
26	Room Bus A; Data	Communication line for bus A
27	Room Bus A; Power	Positive side of bus A
28		
29	Out 2; B	One side of output relay 2; floating
30	Out 2; A	Other side of output relay 2; floating
31		
32	Out 1; B	One side of output relay 1; floating
33	Out 1; A	Other side of output relay 1; floating
34		
35	Supply voltage minus	Connect to negative side of 12-24VDC power supply; see note above
36	Supply voltage plus	Connect to positive side of 12-24VDC power supply

Table 1

2.8.2 To power supply a GPIO module

The GPIO module will typically be powered via the *room bus* (power from other devices on the bus, e.g. the main control unit). In that case no power should be connected to terminal number 36.

If no power is available from other devices on the bus, the GPIO module must be connected to a power supply. The voltage may be in the range from 12 to 24VDC. Connect the positive wire to terminal number 36, and the negative wire to terminal number 35.

2.8.3 To communicate with a GPIO module

The GPIO module has two communication ports for connecting to the *room bus*. The two ports are identical. All units on the *room bus* are connected in a daisy chain ("hand in hand"). If there are only two devices on the bus (*GPIO module* and *main control unit* **OR** *GPIO module* and *corridor panel Chic*), only one port is used. If three or more devices are connected to the bus, both ports are used.

2.8.3.1 Example 1: Connecting to Chic panel

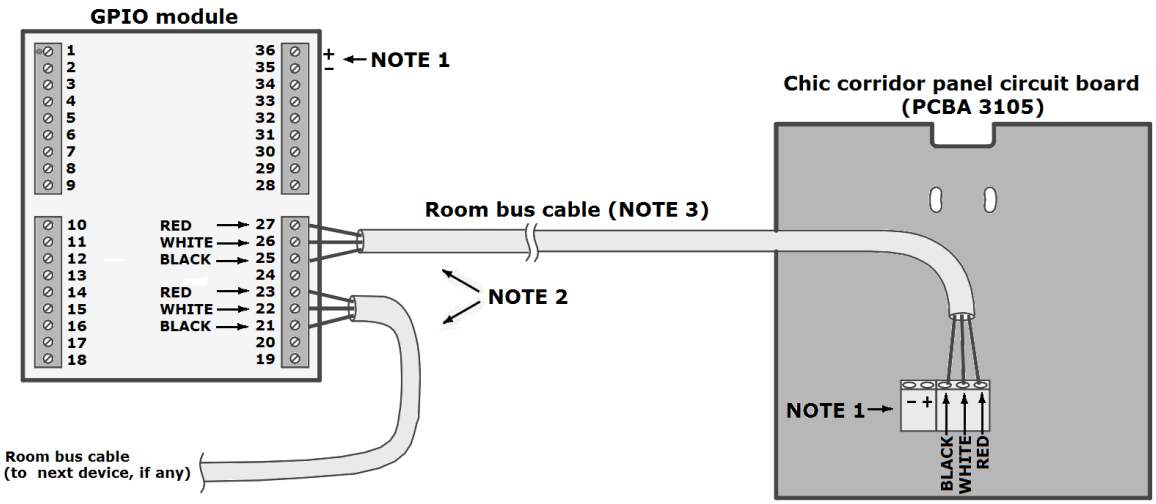

Note 1: The power supply (12-24VDC) can be connected either to the corridor panel or to the GPIO module.
Note 2: The two room bus parts are equal. The cable to the corridor panel can be connected to either of the two.
Note 3: Use cable 4825308 or equivalent.

Figure 58

2.8.3.2 Example 2: Connecting to main control unit

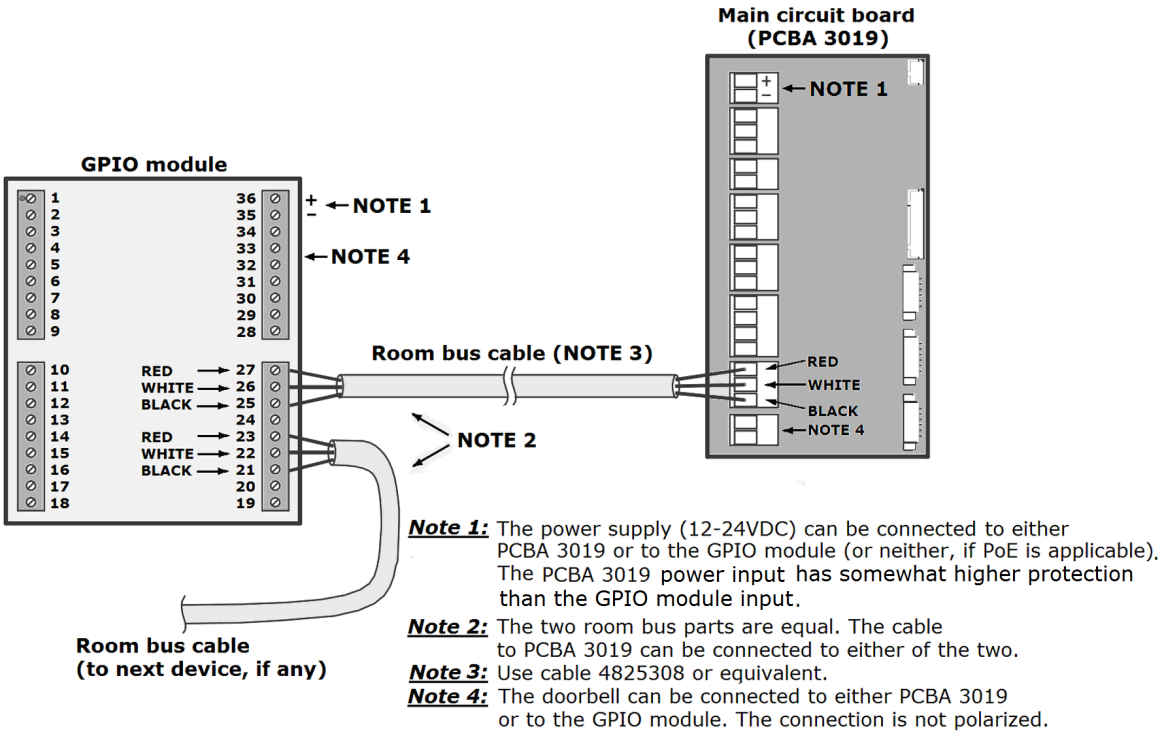

Figure 59

2.8.4 GPIO module inputs

The GPIO module has four inputs:

- two inputs for DND (*do not disturb*)
- two inputs for MUR (*make up room*)

Each input has two possible signal options.

- Inputs 1 and 2 are galvanically isolated from the power supply and communication.
- Inputs 3 and 4 have one side connected to the negative side of the power supply and communication.

Input number	Function		
1	Do not disturb	12-24V AC or DC, galvanically isolated	
2	Make up room	12-24V AC or DC, galvanically isolated	
3	Do not disturb	3A	Dry switch
		3B	5-12VDC
4	Make up room	4A	Dry switch
		4B	5-12VDC

Table 2

2.8.4.1 Example 1: Connecting dry switches for DND and MUR

Figure 60

2.8.4.2 Example 2: Connecting DND and MUR signals from 12V or 24V PLC

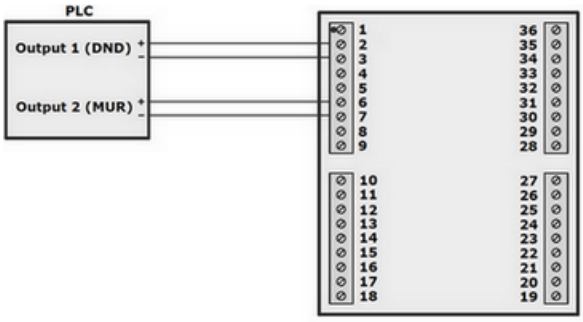

Figure 61

2.8.5 GPIO module outputs

The GPIO module has two outputs. Both outputs are solid state relays, and both outputs are floating, with no reference to the power supply minus ("ground"). See Appendix for output relay specification. The function of the relays depend on which jumper settings that are used; see section To configure a GPIO module.

2.8.5.1 Example 1: Connecting to doorbell

Note: Remove configuration jumper 2; see in section 4.1 where it is located.

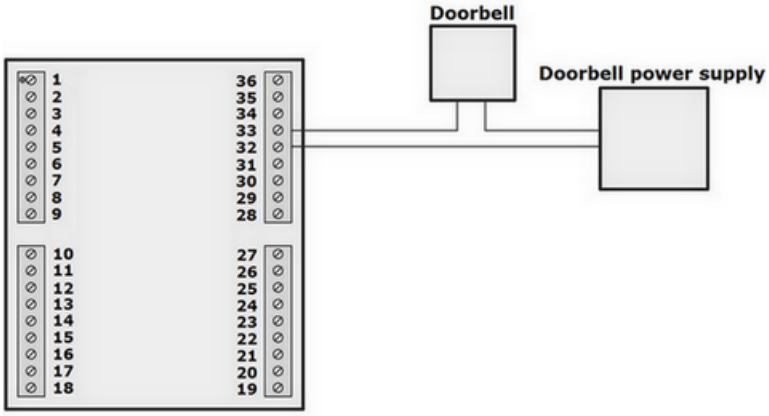

Figure 62

2.8.5.2 Example 2: Connecting to external DND and MUR signal lamps

Note: Insert configuration jumper 2; see in section 4.1 where it is located.

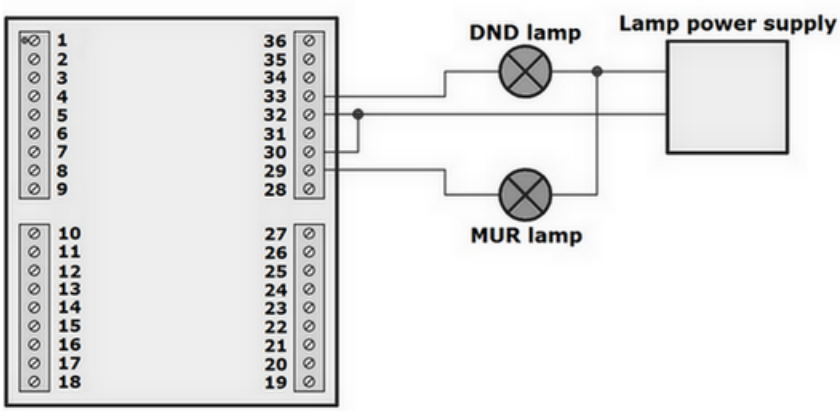

Figure 63

3. Main control unit

The *main control unit* is an in-wall mounted junction box consisting of a main PCBA (*printed circuit board assembly*) and an RFID lock controller unit (*LCU 6333/ LCU 6334*). The *main control unit* can also be connected to one or more of the units shown in Figure 1.

3.1 Battery backup

It is required to mount 3 AA backup batteries in the battery holder of the main control unit; see Figure 64 and Figure 1 for details.

Figure 64

4. GPIO module

The *GPIO module* is a *general purpose input output* module for connection to the *room bus* (cable inside the rooms to which wired room panels, additional GPIO modules and future modules can be connected). For information about mounting and connecting a GPIO module, see section 2.8. For information about configuration jumpers and firmware upgrade for a GPIO module, see this chapter *4*.

4.1 To configure a GPIO module

There are three configuration jumpers (see Figure 65), but at present jumper 3 is not in use.

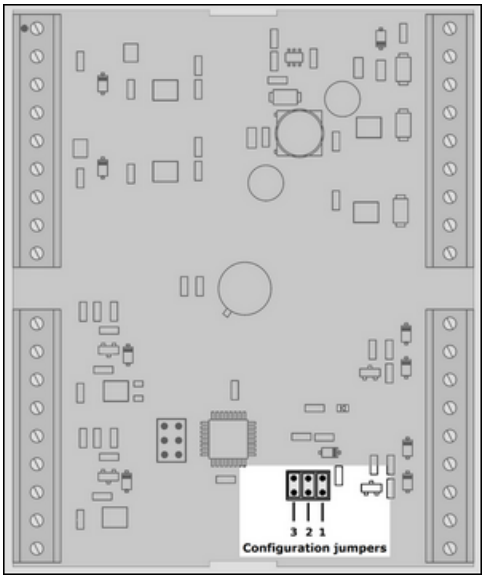

Figure 65

Jumper 1 selects input type for DND and MUR:

Jumper 1 ON	For bistable signal input; DND and MUR states are active as long as the signal is present.
Jumper 1 OFF	For monostable signal input; DND and MUR change state when the signal is momentarily toggled (as *wired room panel 3024*).
	Table 3

Jumper 2 selects output function:

Jumper 2 ON	Output 1 is DND Output 2 is MUR
Jumper 2 OFF	Output 1 is activated when the doorbell button on the corridor panel is pressed. Output 2 is not used.
	Table 4

4.2 To upgrade firmware in a GPIO module

A programming connector is provided for firmware upgrade in the field; see Figure 66.

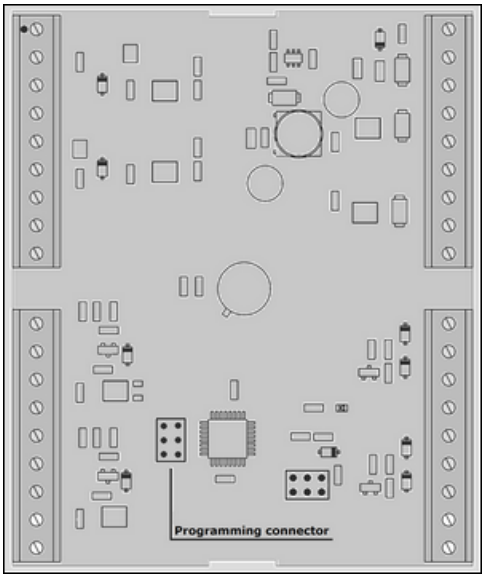

Figure 66

5. Ethernet module

For installation of an Ethernet module on the main control unit, see section 2.2.8.
This chapter 5 describes
connection of an Ethernet module to the Visionline server
web interface
factory reset
boot-up procedure
more about finding the server

5.1 To connect an Ethernet module to the Visionline server

An Ethernet module connects to the server via TCP/IP and automatically adjusts to 10 or 100 MBit/s networks. The Ethernet module starts by retrieving an IP address via DHCP *(Dynamic Host Configuration Protocol)* and then automatically finds the server. ***Note:*** If more than around 500 Ethernet modules are used in the system, it is recommended to use one or more *TCP Concentrators* (one *TCP Concentrator* per 500 Ethernet modules). See *Installation instruction TCP Concentrator* for detailed information.

To find out what IP address the Ethernet module has:

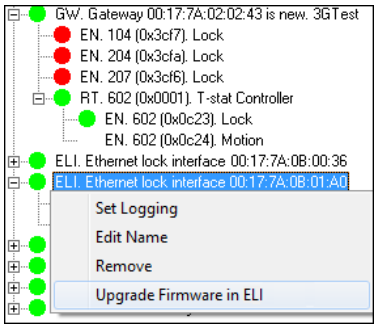

Figure 67

1. Double click on **SysMon.exe** which is located in the Visionline installation folder.
2. Go to **View/Online Network**; the **Online Network** tree will be shown.
3. Mark the concerned 'ELI' (Ethernet module) in the **Online Network** tree. A box with Mac address, IP address etc is shown. ***Note:*** If one or more *TCP Concentrators* are used in the system, the **Online Network** tree will look somewhat different; see details in *Installation Instruction TCP Concentrator*.

Important: A lock with room number etc will not appear under an Ethernet module in the **Online Network** tree until the first event (e.g. card opening) has been sent from the lock to the Visionline server.

If no DHCP server is available:
The IP address of the Ethernet module will change to an IP address in the range 169.254.1.0 – 169.254.254.255; this IP address range is based on the *zero config* standard.

Note: When the Ethernet module has got an IP address, either via DHCP or via *zero config*, it makes an announcement broadcast which the Visionline server should answer to. For more information about how the Ethernet module finds the server, see section 5.5.

5.2 Web interface

If the parameters for the Ethernet module need to be modified to suit the network where it is located, this can be done via a web interface; see screenshot with example values in Figure 68. An explanation of some parameters is found in Table 5 below.

To modify the parameters:

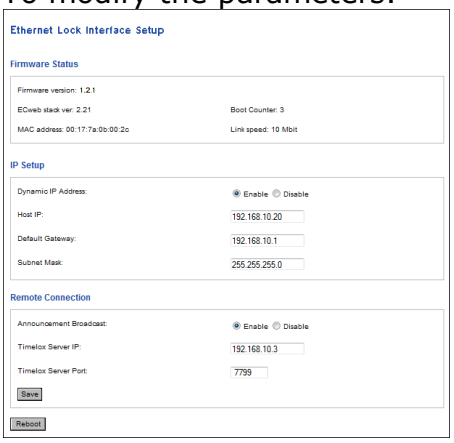

Figure 68

1. Press the Ethernet module button shown in section 5.3 and then release the button.
2. Look in SysMon to see what IP address the Ethernet module has; see details in section 5.1.
3. In the web browser, enter http://ipaddress. See example below:
   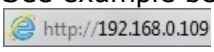

4. Make the desired changes in the **Ethernet Lock Interface Setup** page; see example in Figure 64.
5. If the *server IP* should be changed and there is no DNS (*domain name system*), either enter the applicable **Server IP** or make sure that the radio button 'Enable' is marked for **Announcement Broadcast**; this makes the Ethernet module find the server.
6. When all desired changes have been done in the web interface: click **Save**, then click **Reboot** and press the reset button on the Ethernet module again to close the web interface.

Dynamic IP address	*Enable/Disable*; if this parameter is set to 'Enable', the Ethernet module retrieves an IP address via DHCP (*Dynamic Host Configuration Protocol*) and then automatically finds the server
Host IP	IP address for the Ethernet module
Default gateway	This is the subnet unit to which all IP packets that are heading for an address outside the subnet should be addressed, i.e. the IP address for the router of the concerned subnet
Subnet mask	A mask used to determine what subnet an IP address belongs to
Announcement broadcast	*Enable/Disable*; makes the Ethernet module find the server

Table 5: Description of Ethernet module parameters

5.3 To factory reset an Ethernet module

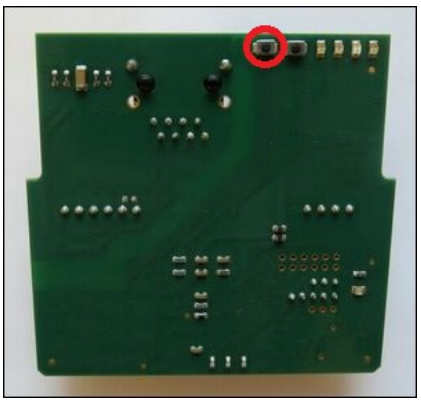

Figure 69

1. If an Ethernet module with unknown IP address e.g. should be used at a demo installation, a factory reset must be made to set the Ethernet module back to its default values. To make a factory reset, press and hold the button marked in Figure 69 while powering up the Ethernet module.

Note: The Ethernet module will not be powered by the backup battery. Power over Ethernet (PoE) or DC power is required for powering the Ethernet module.

5.4 Boot-up procedure

1. When an Ethernet module comes out of reset, it reads its IP configuration from a non-volatile memory.
2. *If 'Dynamic IP Address' is set to* **Disable** (see section 5.2): the Ethernet module sets its IP address to the address stored in the config memory. Continue at step 13 below.
3. *If 'Dynamic IP Address' is set to* **Enable** (see section 5.2): the Ethernet module sends a *DHCP Request packet* with IP destination address 255.255.255.255, i.e. *IP broadcast*, requesting its most recently used IP address.
4. If the network/subnet configuration has not changed, the DHCP server will most likely send a *DHCP ACK packet*, allowing the Ethernet module to continue to use the same IP. The DHCP server may use either *IP broadcast* or *unicast* for this packet; *broadcast* is however most commonly used. Continue at step 10 below.
5. If the DHCP server is unwilling to let the Ethernet module use the same address as before, or if the requested IP is out of scope, it sends a DHCP NAK.
6. The Ethernet module resets its IP address to 0.0.0.0 and sends a *DHCP Discover packet* with IP destination address 255.255.255.255; *IP broadcast*.
7. If a DHCP server is available, it sends a *DHCP Offer packet*. Since the Ethernet module has no valid IP address, the DHCP server must send to IP destination 255.255.255.255; *IP broadcast*.
8. The Ethernet module receives the offer and sends a *DHCP Request packet*,

as in step 3 above, but this time requests the IP address offered by the DHCP server.

9. The DHCP server sends a *DHCP ACK packet*, confirming that the Ethernet module may start using the new IP address. Unlike the ACK in step 4 above, this ACK packet must be sent to IP destination address 255.255.255.255 (*IP broadcast*), since the Ethernet module has not got any confirmed IP address yet.
10. The Ethernet module performs gratuitous ARP (*Address Resolution Protocol*) to ensure that no other host has got the same IP.
11. If IP collision is detected, the Ethernet module sends a *DHCP Decline packet* which refuses the assigned IP address and restarts the IP acquirement procedure for the Ethernet module.
12. If there is no DHCP server available on the subnet, the Ethernet module self-assigns an IP address from the IPv4 Local Link address space (169.254.0.0/16), and sends gratuitous ARP to ensure that no other host has got the same IP.
13. The Ethernet module reads the most recently used Visionline server IP address and tries to open a TCP connection to the server.
14. If the TCP connection attempt fails, the Ethernet module will continue to try connections to the same IP over and over again – unless it detects that the network/subnet setup has changed, e.g. the Ethernet module may have been moved to a new location. Then it will send an application specific service discovery request (*announcement broadcast*) with IP destination address 255.255.255.255; *IP broadcast*. Even if the network/subnet setup is unchanged, but long time (one hour) has elapsed without any successful TCP connection with the Visionline server, the Ethernet module will start sending service discovery requests.
15. If a Visionline server is on the same subnet - or if another Ethernet module with a valid TCP connection to the server is on the subnet - it will send a reply to the querying unit, letting it know the IP address and TCP port of the Visionline server. The Ethernet module then tries TCP connection to that IP. From the payload supplied in the reply (the reply is sent with IP destination address 255.255.255.255, *IP broadcast*), the querying unit can determine if its own IP address properties are correct with respect to network class, default encoder IP and subnet mask. If required, it will self-assign a new IP address within the subnet specified in the reply, and then send gratuitous ARP to ensure that no other host has got the same IP. Then it goes on and tries TCP connection to the received server IP address.
16. Prior to sending the service discovery request, the Ethernet module tries to contact a DNS server (d*omain name system*), with a request for resolving the most recently used *Server Host Name*. If that name is unknown to the DNS, the encoder tries to resolve the factory default Server Host Name. If any of the two names renders a successful DNS reply, the encoder uses the IP address received from the DNS server, and tries TCP connections to that address. If the factory default name is unknown too, or if a DNS server is not available at all, the Ethernet module sends a service discovery request.

Note: 14, (15) and 16 will go on in a round robin way until the Ethernet module has reached the server.

5.5 More about finding the server

This appendix describes the process of how the Ethernet module finds the server. The solution is based on DNS (*domain name system*) as well as on *announcement broadcast*, which is a proprietary implementation of *zero config*; see section 5.1 for information about the *zero config* IP address range. ***Note:*** For more information about setting up DNS entries etc, contact the hotel IT department. A general description of this cannot be made in this document, since this varies with the type of DNS server which is used.

There are three challenges when the Ethernet module is connected to the network:

1. A new Ethernet module must be able to find the server even if it is located on a separate subnet.
2. The Ethernet module must be able to locate a backup server in case the primary server fails. The backup server is assumed to have the latest database from the primary server.
3. The above must be fulfilled even if there are multiple Visionline servers on the same network.

To commission Ethernet modules:
Single server - to commission Ethernet modules with DNS
Multiple servers - to commission Ethernet modules with DNS
To commission Ethernet modules without DNS

To switch to backup server:
Single server - to switch to backup server with DNS
Multiple servers - to switch to backup server with DNS
To switch to backup server without DNS

5.5.1 To commission Ethernet modules with DNS

If the Ethernet module is located on the same subnet as the server, the Ethernet module will locate the server using *announcement broadcast* without any need for manual configuration. However, the normal case is that the server and the Ethernet module are located on different subnets. The first Ethernet module for each subnet requires help from the DNS to locate the server.

5.5.1.1 Single server

1. Add a DNS entry called *timeloxserver* and let its IP address be the address of the Visionline server to which the new Ethernet module shall connect. The Ethernet module will then make a DNS query using the name *timeloxserver* and in this way get the IP address of the server.
2. Connect the Ethernet module to Ethernet and wait for it to appear in the SysMon **Online Network** tree.

5.5.1.2 Multipe servers

In the steps below, it is necessary to know the Visionline *system code*. To find it, double click on **System settings** under **Reports** in the Visionline navigation window.

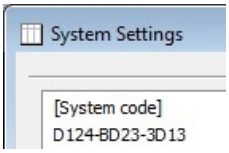

Figure 70

1. For each Visionline server, add a new DNS entry with the system name for the concerned server. The system name is *timelox_12-character system code without dashes*, e.g. *timelox_D124BD233D13*.
2. In order to find the correct server at first installation, the Ethernet modules must be installed for one server at a time.
3. Let *timeloxserver* refer to the IP address of the first Visionline server.
4. When all Ethernet modules have been installed for one server, the DNS entry for *timeloxserver* must be changed to the IP address of the next server.
5. When all Ethernet modules for the last server have been installed, the *timeloxserver* entry must be removed.

Note: Every set of Ethernet modules that is connected with a particular Visionline server will receive the system name of that server, once connection to the server is established. If an Ethernet module for some reason needs to use DNS again in the future, the system name (e.g. *timelox_D124BD233D13*) will "win" over the default name. When the Ethernet module makes a DNS request, the system name will connect it to the correct Visionline server.

5.5.2 To commission Ethernet modules without DNS

1. Connect one Ethernet module to each subnet. Use the web interface for the Ethernet module to configure the IP address of the Visionline server; see details in section 5.2. ***Note:*** This is only needed for the first Ethernet module for each subnet, since the other Ethernet modules on the same subnet will retrieve the server IP address from the first one by *announcement broadcast*.
2. Continue adding Ethernet modules. They will automatically obtain the IP address of the Visionline server from the Ethernet modules on the same subnet that are already online with the server.

5.5.3 To switch to backup server with DNS

5.5.3.1 Single server

1. Change the IP address of the *timeloxserver* entry in the DNS so it points to the backup server. The Ethernet modules will then connect to the backup server if the connection to the primary server is lost and cannot be re-established.

5.5.3.2 Multiple servers

1. For each Visionline server, change the IP address of the system name entry in the DNS so it points to the backup server. The Ethernet modules will then connect to the backup server if the connection to the primary server is lost and cannot be re-established.

5.5.4 To switch to backup server without DNS

1. Remove the primary server from the network.
2. Assign the IP address of the primary server to the backup server
   OR
2. Enter the IP address of the backup server in the web interface for one Ethernet module per subnet. ***Note:*** It will take one hour after the primary server closes its sockets until the rest of the Ethernet modules enable their *announcement broadcast*.

6. Corridor panels

There are two types of corridor panels: *access panels* and *room status panels*.

6.1 To connect a room status panel to an access panel

 Figure 71	1. Connect the access panel to the main control unit; see Figure 71.
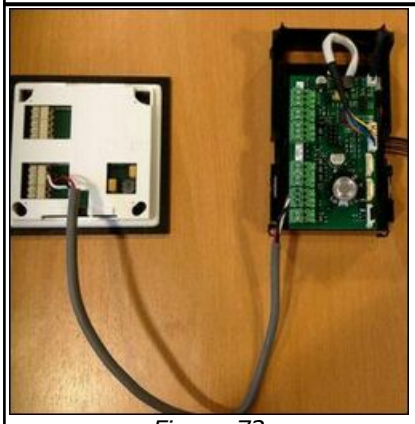 *Figure 72*	2. Connect the wired room panel to the main control unit; see Figures 71 and 72. 3. Make a reset of the main control unit; see details in section 8.1.

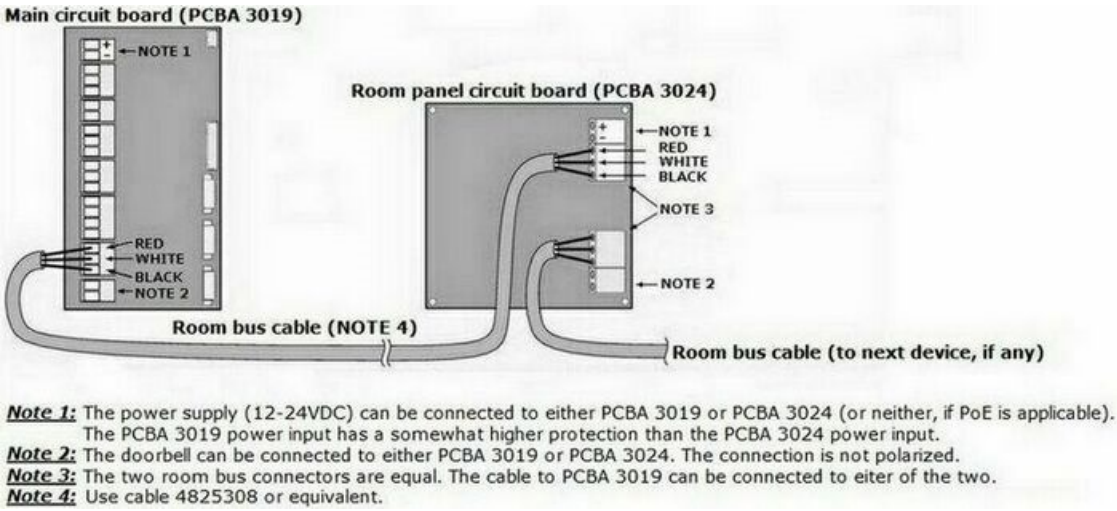

Figure 73

6.2 To change color of a panel

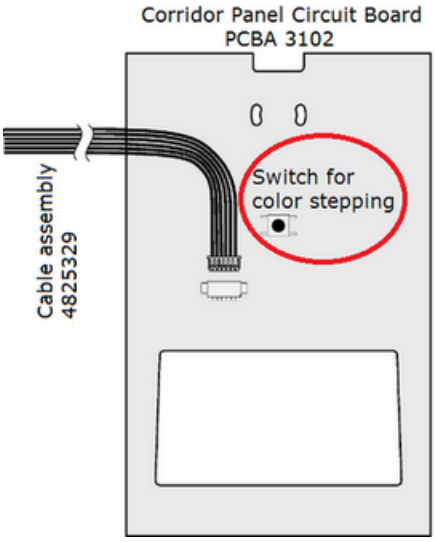

Figure 74

1. The color of access panel Allure Grand and room status panels Allure Blend and Allure Chic can be changed; use the switch marked in Figure 74. There are 16 colors available.

7. Wired room panels

7.1 To dim the light on a wired room panel

Note: At delivery, the jumpers are not mounted on *JP1* and *JP2*, i.e. at delivery dimming is on and will start 1 minute after activity.

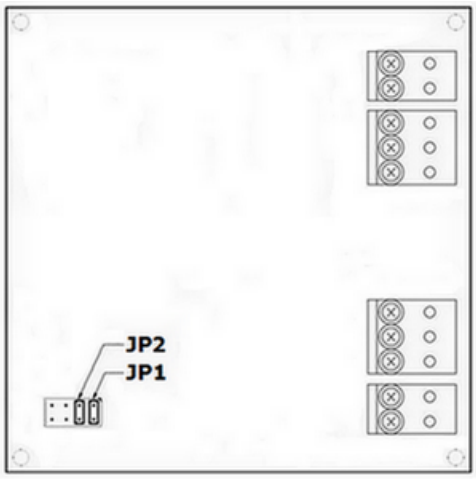

Figure 75: Jumpers mounted (delivery state is jumpers off)

Jumper 1 (JP1):

Jumper ON:	Dimming is OFF (status of jumper 2 does not matter)
Jumper OFF:	Dimming is ON

Table 6

Jumper 2 (JP2):

Jumper ON:	Dimming starts 10 seconds after activity
Jumper OFF:	Dimming starts 1 minute after activity

Table 7

8. Troubleshooting and maintenance

8.1 To reset the main control unit

If there are problems with some Allure functions after connecting/disconnecting components or after uploading firmware to the LCU, make a reset of the main control unit.

 Figure 76	3. Press the small button which is located beneath the LCU; see reset button marked in Figure 76. ***Note:*** There are two buttons; the reset button is the one which is located closest to the LCU.

8.2 To remove an access panel

 Figure 77	1. Present a valid staff card at the access panel. 2. Open the locking mechanism on the back frame for the access panel; see Figure 77. 3. Remove the access panel from the back frame. 4. Perform the needed maintenance.
 Figure 78	5. Snap the access panel onto the back frame again and push down the locking mechanism according to Figure 78. 6. Present a valid staff card at the access panel and make sure that the door opens.

8.3 To reset the tamper switch

If the tamper switch in enabled and someone tries to remove the access panel, the tamper switch will go off. The access panel will start flashing red and will not accept cards. To reset the tamper switch:

1. Open the locking mechanism on the back frame for the access panel; see Figure 77.
2. Remove the access panel from the back frame.
3. Connect the service PC (with *Lock Service 3G* installed) and perform any valid communication with *Lock Service 3G* (see *Quick reference guide Lock Service 3G* for details), e.g. set the time or make a parameter read-out.
4. Snap the access panel onto the back frame again and push down the locking mechanism according to Figure 78.
5. Present a valid staff card at the access panel and make sure that the door opens.

8.4 To power open an access panel

If the power at an access panel is too low so that the door cannot open when a card is presented at the access panel, a service PC with *Lock Service 3G* can be used for *power opening* (see *Quick reference guide Lock Service 3G* for details) of the access panel.

8.5 To emergency open a door communication unit

For installations where *Allure Grand* access panel is used in combination with *door communication unit* (see section 2.5 for more information), the latter can be emergency opened by the cable shown in Figure 79 in case all battery warnings have been ignored and no mechanical override solution such as cylinder is present. The cable can be plugged into any USB compatible unit (laptop, power bank, charger etc).

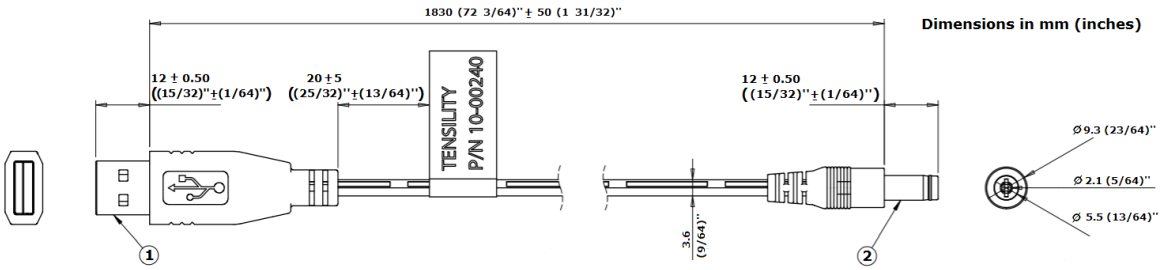

Figure 79

Pos	Description
1	Connector, plug, USB A
2	Connector, DC plug, 5.5x2.1xL23mm, molding style, spring contacts

Table 8

Appendix: Quick reference of technical data

Main control unit

Supply voltage: *Option 1* or *2* is automatically chosen depending on what the main control unit is connected to. If the main PCBA of the main control unit is connected to a power supply, it is *option 1*. If an Ethernet module and a PoE network is applicable, it is *option 2*. *Option 3* is a backup for basic functions, in case *option 1* or *2* disappears.	*Option 1:* 12-24 VDC from external power supply
	Option 2: internal 12 VDC supplied by Ethernet module; PoE
	Option 3: 4.5V from battery; reduced functionality
Maximum current consumption:	1A continuously for main control unit incl. load
Climatic resistance:	Indoor use, 20-95% relative humidity, non-condensing
Operating temperature:	5-60 °C (41–140 °F)

Room bus cable (Art.No 4825308)

Cable type, general	Multi-conductor, unshielded
Number of conductors	3
Conductor gauge	20AWG or 0.5mm^2
Conductor type	Stranded 7/28, tinned copper
Insulation	Color-coded PVC per UL 1007
- Conductor no. 1 color	Black
- Conductor no. 2 color	White
- Conductor no. 3 color	Red
Jacket material	PVC, gray
Nominal outer diameter	5.5 mm
Temperature range	-20 to +80°C (–4 to +176 °F)

Access panel

Dimensions, W x H x D (Allure Grand and Allure Solo):	110 x 159 x 13 mm (4 11/32'' x 6 17/64'' x 33/64'')
Climatic resistance:	Indoor use, 20-95% relative humidity, non-condensing
Operating temperature:	5-60 °C (41–140 °F)

Room status panel

Dimensions, W x H x D (Allure Blend):	110 x 159 x 13 mm (4 11/32'' x 6 17/64'' x 33/64'')
Dimensions, W x H x D (Allure Chic):	110 x 110 x 13 mm (4 11/32'' x 4 11/32'' x 33/64'')
Climatic resistance:	Indoor use, 20-95% relative humidity, non-condensing
Operating temperature:	5-60 °C (41–140 °F)

Wired room panel

Dimensions, W x H x D:	94 x 94 x 13 mm (3 45/64'' x 3 45/64'' x 33/64'')
Power supply:	Via communication cable or by external power supply connected to power connector
Supply voltage:	12-24 VDC
Climatic resistance:	Indoor use, 20-95% relative humidity, non-condensing
Operating temperature:	5-60 °C (41–140 °F)

Frame communication unit

Dimensions, W x H x D:	24 x 140 x 15,3 mm (61/64'' x 5 33/64'' x 39/64'')
Supply voltage:	Powered from the Allure main PCBA through cable
Mechanical interface:	Recessed in door frame and door leaf
Electrical interface:	Main control unit (wired)
Communication:	Infrared communication between frame and door unit
Climatic resistance:	Indoor use, 20-95% relative humidity, non-condensing
Operating temperature:	5-60 °C (41–140 °F)

Door communication unit

Dimensions, W x H x D:	24 x 140 x 87 mm (61/64'' x 5 33/64'' x 3 27/64'')
Supply voltage:	3 x AA internal alkaline batteries
Mechanical interface:	Recessed in door frame and door leaf
Electrical interface:	Main control unit (wired)
Communication:	Infrared communication between frame and door unit
Climatic resistance:	Indoor use, 20-95% relative humidity, non-condensing
Operating temperature:	5-60 °C (41–140 °F)

Ethernet module

Dimensions, W x H x D:	63 x 66 x 22 mm (2 31/64'' x2 19/32'' x 7/8'')
Climatic resistance:	Indoor use, 20-95% relative humidity, non-condensing
Operating temperature:	5-60 °C (41–140 °F)
Supply voltage:	*Option 1:* • Revision I and later (see label): 12-24VDC via main control unit • Revision H and earlier (see label): 12VDC via main control unit *Option 2:* Power over Ethernet (PoE)
Ferrite dimensions, W x H x D:	24,5 x 21,0 x 40,5 (31/32)'' x (53/64)'' x (1 19/32)''

Junction box, new installations

Dimensions, W x H x D:	**Large junction box:** 76,2 x 125,2 x 65,0 (3" x 4 15/16" x 2 9/16") **Small junction box:** 76,2 x 76,2 x 65,0 (3" x 3" x 2 9/16")
Conduit tubes:	**Large junction box:** 2 pcs are included with each junction box; maximum number of conduit tubes is 9 **Small junction box:** 2 pcs are included with each junction box; maximum number of conduit tubes is 6
Climatic resistance:	Indoor use, 20-95% relative humidity, non-condensing
Operating temperature:	5-60 °C (41–140 °F)

Junction box, existing installations

Dimensions, W x H x D:	**Large junction box:** 86,0 x 135,0 x 76,2 (3 25/64" x 5 5/16" x 3") **Small junction box:** 86,0 x 86,0 x 76,2 (3 25/64" x 3 25/64" x 3")
Climatic resistance:	Indoor use, 20-95% relative humidity, non-condensing
Operating temperature:	5-60 °C (41–140 °F)

GPIO module

Dimensions without mounting ears, W x H x D:	90 x 105 mm (3 35/64" x 4 9/64")
Climatic resistance:	Indoor use, 20-95% relative humidity, non-condensing
Operating temperature:	5-60 °C (41–140 °F)
Inputs:	

Input number	Function	Description	
1	Do not disturb	12-24V AC or DC, galvanically isolated	
2	Make up room	12-24V AC or DC, galvanically isolated	
3	Do not disturb	3A	Dry switch
		3B	5-12V DC
4	Make up room	4A	Dry switch
		4B	5-12V DC

Outputs:

Output relay specification:

Maximum voltage	48V AC or DC
Maximum current	600 mA
Maximum on-resistance	0.8 Ω

Stay Smart

ASSA ABLOY Hospitality APAC
E-mail: apac.hospitality@assaabloy.com
Phone: +65 6305 7670

ASSA ABLOY Hospitality EMEA
E-mail: emea.hospitality@assaabloy.com
Phone: +47 69 24 50 00

ASSA ABLOY Hospitality North America
E-mail: northam.hospitality@assaabloy.com
Phone: +1 972 907 2273

ASSA ABLOY Hospitality Latin America
E-mail: lam.hospitality@assaabloy.com
Phone: +52 55 36 40 12 00

www.assaabloyhospitality.com